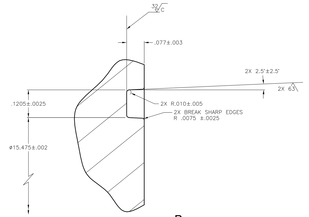

DETAIL B (ZONE C18)
SCALE: 10/1

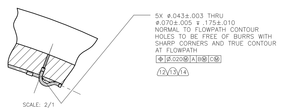

SCALE: 2/1

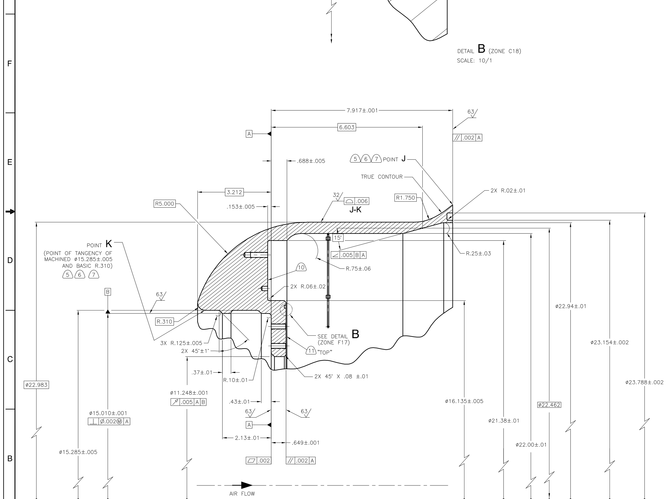

SECTION D-D (ZONE E3)
SCALE: 1/1

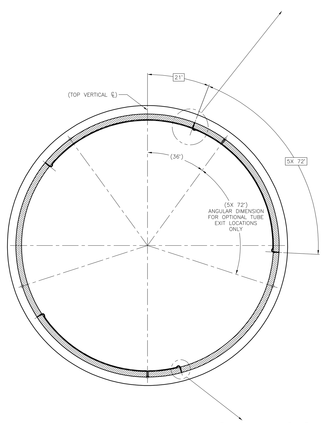

SECTION C-C (ZONE C6)

SCALE: 4/1

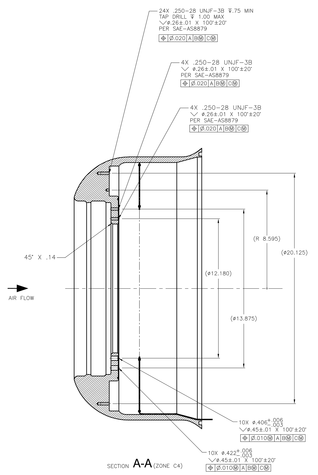

SECTION A-A (ZONE C4)

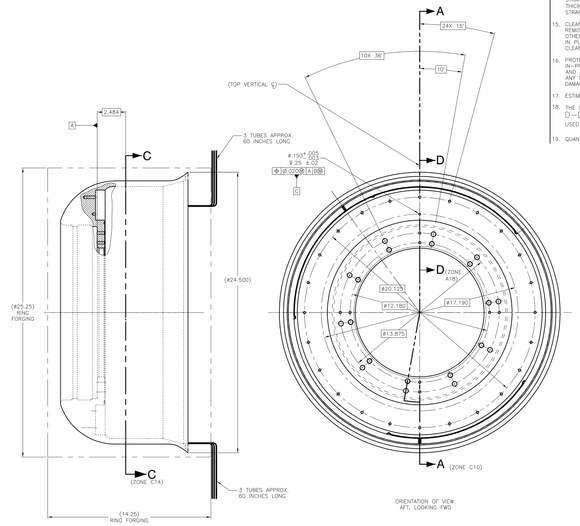

ORIENTATION OF VIEW:
AFT, LOOKING FWD

12. ALL DIMENSIONS ARE BASIC. PREPARE AND INSTALL STATIC PRESSURE TAP AS SHOWN PER DRAWING. PRESSURE TAP SURFACE WILL BE .064 X .012 WALL X APPROX .30" LONG. MATERIAL: TYPE 304 STAINLESS STEEL ASTM A-269 (ANEALED) CONDITION.

13. APPLY DURACO No. 4525 500° SILICONE PAINT PER MANUFACTURER'S INSTRUCTIONS. PURCHASE FROM CORRONICS CORP. 3379 SHORE PKWY., BROOKLYN, NEW YORK 11235 (719) 646-7996.

14. ATTACH TO SURFACE AT FIRST CONTACT POINT WITH SURFACE AFTER BEND WITH .118-.6 STAINLESS STEEL BLIND RIVETS (.093 GRIPS TO .032 THICK). USE DRIVE RIVETS TO ATTACH STRAP TO SURFACE.

15. CLEAN THE FINISHED PART TO REMOVE ALL DIRT, OIL, CHIPS, OR OTHER CONTAMINANTS. THEN WRAP IN PLASTIC TO PRESERVE CLEANLINESS.

16. PROTECT THE PART DURING IN-PROCESS STORAGE, HANDLING, AND TRANSPORTATION TO PREVENT ANY NICKS, SCRATCHES, OR OTHER DAMAGE.

17. ESTIMATED PART WEIGHT = 210 LBS.

18. THE LAST SECTION LETTER USED IS D-D. THE LAST DETAIL LETTER USED IS E.

19. QUANTITY: ONE REQUIRED.

1. THIS DRAWING IS A REDRAW, WITH MODIFICATIONS, OF GE DRAWING 4013540-402 HOUSING INLET-INNER.

2. MATERIAL: SHALL BE A TYPE 410 STAINLESS STEEL ANNEALED RING FORGING PER AMS 5613. PROVIDE A LEGIBLE COPY OF THE MILL TEST REPORT, WITH UNITS IN ENGLISH. FORGING VENDOR SHALL PROVIDE ADDITIONAL MATERIAL TO THE MACHINING VENDOR, WHICH WILL BE USED FOR THREE TENSILE TEST SPECIMENS PER ASTM E8. "SPECIMEN 1" EXCESS FORGING MATERIAL SHALL BE PROVIDED AS THREE 1.0 INCH X 1.0 INCH X 7.0 INCH LENGTH RODS.

3. DO NOT EXPOSE PART TO HYDROGEN.

4. 125 Ra ALL MACHINED SURFACES, EXCEPT AS NOTED.

5. FOR INSPECTION PURPOSES, CONTOUR COORDINATES ARE BASIC AND DEFINE THE TRUE CONTOUR. SEE NOTE 7 (ZONE E18).

6. CONTOUR IS PRODUCED BY FAIRED LINES BETWEEN THE STATIONS FROM THE FORGING. CONTOUR IS SMOOTH AND CONTINUOUS WITHIN TOLERANCE SPECIFIED. (ZONE E18).

7. THE FLOWPATH CONTOUR IS DEFINED IN THE GE ELECTRONIC CAD MODEL DRAWING NUMBER 4013540-402 WHICH IS AVAILABLE UPON REQUEST FROM N.A.S.A. (ZONE E18).

8. BEFORE FINISH MACHINING, HEAT TREAT PART AND TENSILE SPECIMENS TO Rc 26±2. PERFORM A HARDNESS TEST OF THE PART AND TENSILE SPECIMENS AFTER HEAT TREATMENT. REPORT THE RESULTS. FINISH MACHINE THE TENSILE SPECIMENS. PER ASTM E8. "SPECIMENS 1" PERFORM TENSILE TEST AND REPORT RESULTS PER ASTM E21.

9. AFTER FINISH MACHINING FLUORESCENT PENETRANT INSPECT ALL ACCESSIBLE SURFACE PER ASTM E1417, TYPE 1, METHOD A (WATER-WASHABLE), OR EQUAL, WITH REJECTION CRITERIA PER MIL-STD-1907, TABLE 1, GRADE A, OR EQUAL. PROVIDE AN INSPECTION REPORT.

10. VIBRO-PEEN PER SAE-AS478, METHOD 2D1, OR DOT-PEEN PER SAE-AS478, METHOD 2T1. THE DRAWING/PART NUMBER 00173376. THE ACTUAL PART WEIGHT IN POUNDS, USING ½ INCH HIGH CHARACTERS. ON SPECIFIED SURFACE AT LOCATION SHOWN. (ZONE D18).

11. VIBRO-PEEN PER SAE-AS478, METHOD 2D1, OR DOT-PEEN PER SAE-AS478, METHOD 2T1, USING ¼ INCH HIGH CHARACTERS, "TOP" ON SPECIFIED SURFACE, IN LOCATION SHOWN. (ZONE C18).

CONTROLLED DRAWING
AEROPROPULSION SYSTEMS
THIS DRAWING IS UNDER CONFIGURATION CONTROL.
ANY REVISIONS MUST BE APPROVED BY THE CONTROLLING ORGANIZATION.
CONTACT PROPULSION SYSTEMS ENGINEERING FOR INFORMATION.

SYM	ZONE	DESCRIPTION	APP DATE
		REVISIONS	

LAST ASSIGNED	REV. DWG	PRI-DWG NBR	REV NOTE

CAD DRAWING - DO NOT REVISE MANUALLY

PROPRIETARY INFORMATION
THIS DRAWING IS THE PROPERTY OF FLOW INTERNATIONAL CORPORATION AND IS TO BE USED ONLY FOR THE PURPOSE STATED HEREIN.
COPYRIGHT 1996

BLDG 0023 ERB WEST WING
CELL WB SINGLE SPOOL TURBINE FACILITY

HOUSING, INLET-INNER

UNLESS OTHERWISE SPECIFIED DIMENSIONS ARE IN INCHES TOLERANCE ON			
.X	±		
.XX	±		
.XXX	±		
ANGULAR	±		
FRACTIONAL	±		
MATL			
FINISH			
BREAK EDGES			

DRAWN			
CHECKED			
ENGINEERING			
MFG ENGINEERING			
QUALITY			
PROJECT ENGINEER			
PROJECT MANAGER			
APPROVED			

FD
FLOW INTERNATIONAL CORPORATION

SIZE	SCALE		
REV. NBR.	REV LOC'M 'ZR'		
SHEET	OF		
SIZE	BLDG/SYS	PROJECT #	SHEET/TYP-SEQ
CR	0023 -	00173376	- M- 501
AREA: CDS 100			SHEET 01 OF 01
DATE: 03/27/2009		SOFTWARE: AUTOCAD 2006	
SCALE: 1/2 AND NOTED		OPTICAL DATE: 04-01-06	